3:1 High Speed USB Switch with Audio and MHL Capability NCN1188

The NCN1188 allows portable systems to share a single USB 2.0 or 3.0 receptacle to transmit and receive paired signals from three separate locations. All of the three differential channels are compliant to High Speed USB 2.0, Full Speed USB 1.1, Low Speed USB 1.0 and any generic UART protocol. The two dedicated high speed data paths also support Mobile High Definition Link (MHL) video up to resolutions of 1080i (2.25 Gbps) and 1080p (3 Gbps in Packed Pixel mode). The multi−purpose audio path is capable of passing signals with negative voltages as low as 2 V below ground and features shunt resistors to reduce Pop and Click noise in the audio system. The NCN1188 is housed in a space saving, ultra low profile 2.0 x 1.7 x 0.5 mm, 12 pins UQFN package.

Features

- High Bandwidth of 1.8 GHz
- V_{CC} Operating Range from 2.7 V to 5.5 V
- V_{IS} Signal from 0 V to 3.7 V for Data Transfer
- V_{IS} Signal from −2 V to 2 V for Stereo Headphone Connection
- Audio Shunt resistor for Pop & Click Noise Reduction
- V_{IO} Control Pins Compatible to 1.8 V Interfaces
- Low Power Consumption of 23 μA
- Small UQFN 2.0 x 1.7 x 0.5 mm Package
- These Devices are Pb−Free and are RoHS Compliant

Typical Applications

- USB 2.0 / 3.0 Micro−B Applications
- USB to HDMI Video Interfaces via MHL
- Features Phones and Smart Phones
- Digital Cameras
- Handset Media Players

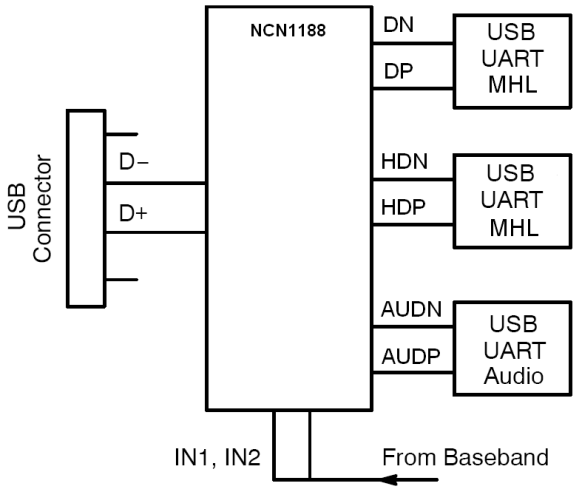

Figure 1. NCN1188 Typical Application Schematic

MARKING DIAGRAM

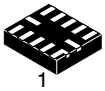

UQFN12
MU SUFFIX
CASE 523AE

AG = Specific Device Code
M = Date Code
▪ = Pb−Free Package

PIN ASSIGNMENTS

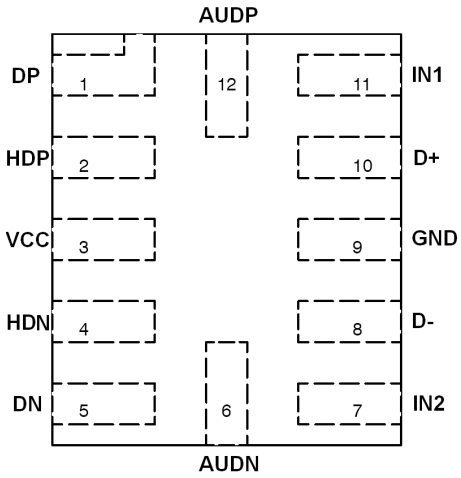

(Top View)

ORDERING INFORMATION

Device	Package	Shipping†
NCN1188MUTAG	UQFN12 (Pb−Free)	3000 / Tape & Reel

†For information on tape and reel specifications, including part orientation and tape sizes, please refer to our Tape and Reel Packaging Specifications Brochure, BRD8011/D.

© Semiconductor Components Industries, LLC, 2016

NCN1188 TRUTH TABLE

Function	IN1	IN2	Shunt
Hi−Z	0	0	Enable
DN / DP	0	1	Enable
AUDN / AUDP	1	0	Disable
HDN / HDP	1	1	Enable

SIMPLIFIED BLOCK DIAGRAM

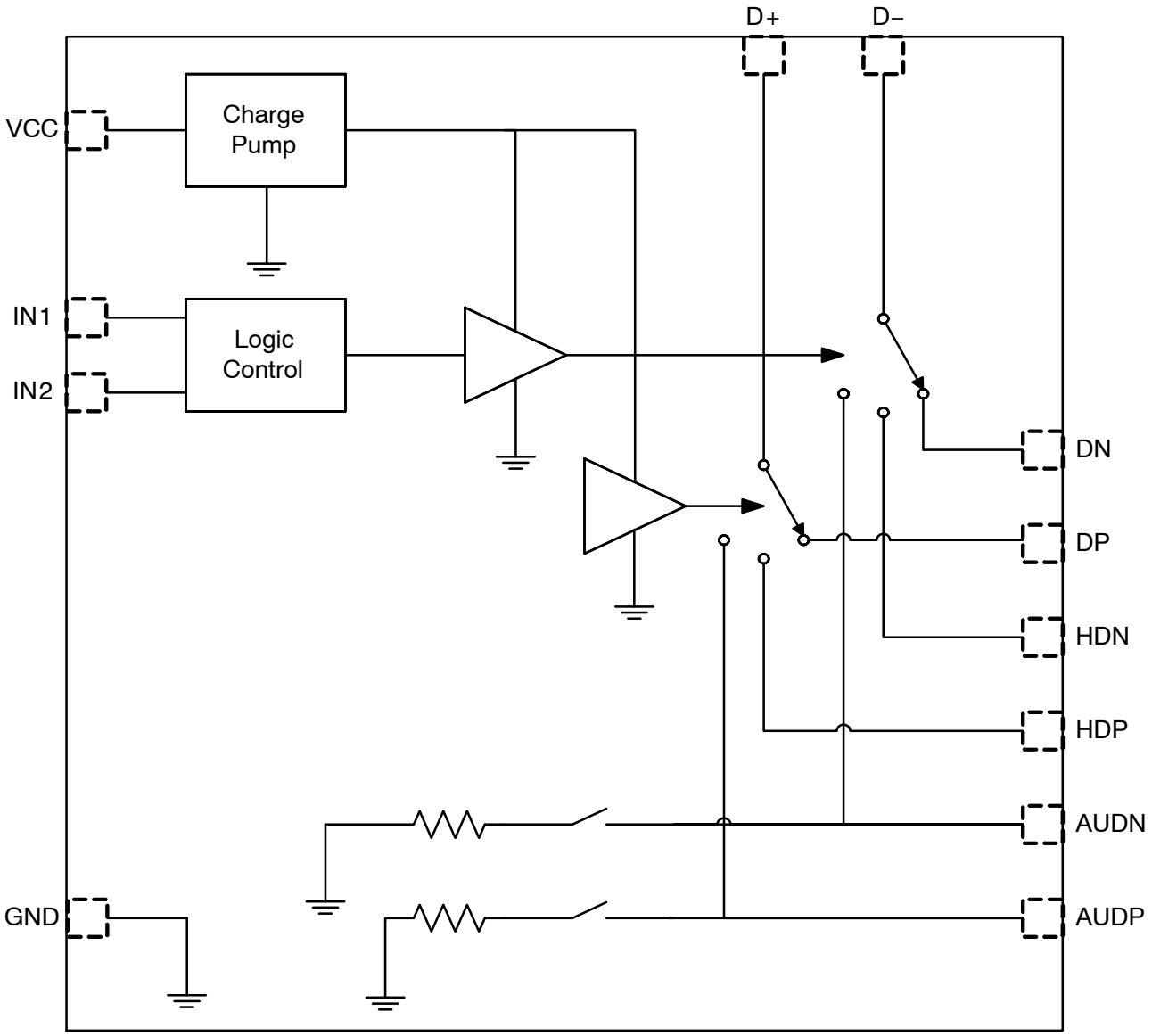

Figure 2. Simplified Block Diagram

PIN DIAGRAM

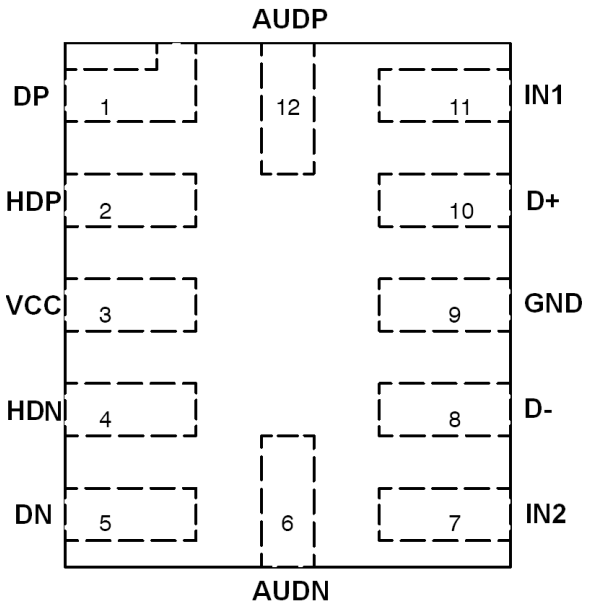

Figure 3. Pin Assignments (Top View)

PIN DESCRIPTION

Name	Pin	Description
DP	1	**USB Positive Path**. If active, this pin is connected to D+ pin.
HDP	2	**HD Positive Path**. If active, this pin is connected to D+ pin.
VCC	3	**Analog Supply**. This pin is the analog and digital supply of the device. A 100 nF ceramic capacitor or larger must bypass this input to the ground. This capacitor should be placed as close a possible to this input.
HDN	4	**HD Negative Path**. If active, this pin is connected to D− pin.
DN	5	**USB Negative Path**. If active, this pin is connected to D− pin.
AUDN	6	**Audio N**. If active, this pin is connected to D− pin.
IN2	7	**Input Selection 2**. Do not float this pin.
D−	8	**Negative data line**. Must be connected to the D− pin of USB receptacle.
GND	9	**Ground Reference**. Must be connected to the system ground.
D+	10	**Positive data line**. Must be connected to the D+ pin of USB receptacle.
IN1	11	**Input Selection 1**. Do not float this pin.
AUDP	12	**Audio P**. If active, this pin is connected to D+ pin.

MAXIMUM RATINGS (Note 1)

Rating	Symbol	Value	Unit
Maximum Supply Voltage Range on VCC pin	V_{CCMAX}	– 0.3 to 6.0	V
Maximum Analog Signal Voltage Range on DN, DP, HDN, HDP pins	V_{ISMAX}	– 0.3 to 5.5	V
Maximum Analog Signal Voltage Range on D+, D– pins	V_{COMMAX}	– 2.5 to 5.5	V
Maximum Analog Signal Voltage Range on IN1, IN2 pins	V_{IOMAX}	–0.3 to V_{CC}+ 0.3	V
Maximum Analog Signal Voltage Range on AUDN, AUDP pins	V_{AUDMAX}	–2.5 to V_{CC}+ 0.3	V
Latch up Current (Note 2)	I_{LU}	±100	mA
Human Body Model (HBM) ESD Rating (Note 3)	ESD HBM	4000	V
Machine Model (MM) ESD Rating (Note 3)	ESD MM	100	V
Maximum Junction Temperature	T_{JMAX}	+150	°C
Storage Temperature Range	T_{STG}	–55 to + 150	°C
Moisture Sensitivity (Note 4)	MSL	Level 1	

Stresses exceeding those listed in the Maximum Ratings table may damage the device. If any of these limits are exceeded, device functionality should not be assumed, damage may occur and reliability may be affected.

1. Maximum electrical ratings are defined as those values beyond which damage to the device may occur at T_A = 25°C.
2. Latch up Current Maximum Rating: ±100 mA per JEDEC standard: JESD78.
3. This device series contains ESD protection and passes the following tests:
   Human Body Model (HBM) ±4.0 kV per JEDEC standard: JESD22–A114 for all pins.
   Machine Model (MM) ±100 V per JEDEC standard: JESD22–A115 for all pins.
4. Moisture Sensitivity Level (MSL): 1 per IPC/JEDEC standard: J–STD–020A.

RECOMMENDED OPERATING CONDITIONS

Symbol	Parameter	Conditions	Min	Typ	Max	Unit
VOLTAGE RANGES						
V_{CC}	VCC pin operating range		2.7	–	5.5	V
V_{IS}	Analog Signal Voltage range (Note 5)	High Speed Data Audio	0 –2.0	– –	3.7 2.0	V
TEMPERATURE RANGES						
T_A	Operating Ambient Temperature		–40	–	85	°C
T_J	Operating Junction Temperature		–40	–	125	°C

Functional operation above the stresses listed in the Recommended Operating Ranges is not implied. Extended exposure to stresses beyond the Recommended Operating Ranges limits may affect device reliability.

5. If the audio channel is not in use, it is recommended that no signals are applied on the audio inputs AUDN and AUDP

ELECTRICAL CHARACTERISTICS

Min and Max limits apply for T_A from –40°C to +85°C (unless otherwise noted). Typical values are referenced to V_{CC} = 3.6 V, T_A = +25°C (unless otherwise noted).

Symbol	Parameter	Conditions	Min	Typ	Max	Unit
CURRENT CONSUMPTION						
I_{CC}	Product Supply Current	V_{CC} = 4.2 V, I_{IS} = 0	–	23	35	μA
CONTROL LOGIC (IN1, IN2 pins)						
V_{IL}	Low Voltage Input Threshold	V_{CC} = 2.7 V V_{CC} = 3.6 V V_{CC} = 4.2 V	– – –	– – –	0.4 0.4 0.4	V
V_{IH}	High Voltage Input Threshold	V_{CC} = 2.7 V V_{CC} = 3.6 V V_{CC} = 4.2 V	1.3 1.4 1.5	– – –	– – –	V
V_{IHYS}	Voltage Input Hysteresis		–	250	–	mV
I_{IN}	Leakage Current		–	–	±100	nA

ELECTRICAL CHARACTERISTICS

Min and Max limits apply for T_A from −40°C to +85°C (unless otherwise noted). Typical values are referenced to V_{CC} = 3.6 V, T_A = +25°C (unless otherwise noted).

Symbol	Parameter	Conditions	Min	Typ	Max	Unit
DATA SWITCHES DC CHARACTERISCTICS						
R_{ON}	On Resistance	V_{CC} = 3.0 V V_{IS} from 0 V to 2.4 V, I_{IS} = 15 mA	–	5	7.5	Ω
R_{ON_MAT}	On Resistance Matching	V_{CC} = 3.0 V V_{IS} from 0 V to 1.7 V, I_{IS} = 15 mA	–	0.09	–	Ω
R_{ON_FLT}	On Resistance Flatness	V_{CC} = 3.0 V V_{IS} from 0 V to 1.7 V, I_{IS} = 15 mA	–	0.06	–	Ω
I_{SW_OFF}	Off State Leakage	V_{CC} = 3.6 V V_{IS} From 0 V to 3.6 V	–	–	200	nA
I_{SW_ON}	On State Leakage	V_{CC} = 3.6 V V_{IS} From 0 V to 3.6 V	–	–	±200	nA
DATA SWITCHES AC CHARACTERISTICS						
C_{ON}	Equivalent On Capacitance	Switch ON, f = 1 MHz	–	4.5	–	pF
C_{OFF}	Equivalent Off Capacitance	Switch OFF, f = 1 MHz	–	3	–	pF
D_{IL}	Differential Insertion Loss	f = 10 MHz f = 800 MHz f = 1.1 GHz	–	−0.5 −1.8 −2.1	–	dB
D_{ISO}	Differential Off Isolation	f = 10 MHz f = 800 MHz f = 1.1 GHz	–	−53 −19 −18	–	dB
D_{CTK}	Differential Crosstalk	f = 10 MHz f = 800 MHz f = 1.1 GHz	–	−55 −20 −18	–	dB
$PSRR_{SW}$	Power Supply Ripple Rejection	From V_{CC} onto D+ / D− f = 217 Hz, R_L = 50 Ω	–	90	–	dB
AUDIO SWITCHES DC CHARACTERISCTICS						
R_{ON}	On Resistance	V_{CC} = 3.0 V V_{IS} from −2.0 V to 2.0 V, I_{IS} = 50 mA	–	3	5	Ω
R_{ON_MAT}	On Resistance Matching	V_{CC} = 3.0 V V_{IS} from −2.0 V to 2.0 V, I_{IS} = 50 mA	–	0.04	–	Ω
R_{ON_FLT}	On Resistance Flatness	V_{CC} = 3.0 V V_{IS} from −2.0 V to 2.0 V, I_{IS} = 50 mA	–	0.02	–	Ω
R_{SH}	Shunt Resistance	V_{CC} = 3.6 V	–	125	200	Ω
AUDIO SWITCHES AC CHARACTERISTICS						
THD_{AUD}	Audio THD	From 20 Hz to 20 kHz V_{IS} = 0.4 V_{RMS}, DC bias = 0V, Load = 16 Ω	–	0.01	–	%
$PSRR_{AUD}$	Power Supply Ripple Rejection	From V_{CC} onto AUDN / AUDP f = 217 Hz, R_L = 16 Ω	–	90	–	dB

ELECTRICAL CHARACTERISTICS

Min and Max limits apply for T_A from −40°C to +85°C (unless otherwise noted). Typical values are referenced to V_{CC} = 3.6 V, T_A = +25°C (unless otherwise noted).

Symbol	Parameter	Conditions	Min	Typ	Max	Unit
SWITCHES TIMING CHARACTERISCTICS						
t_{PD}	Propagation Delay	(Notes 6 and 7)	–	0.25	–	ns
t_{ON}	Turn On Time	V_{IS} = 1 V, R_L = 50 Ω, C_L = 7 pF (fixture only)	–	2.2	–	μs
t_{OFF}	Turn Off Time	V_{IS} = 1 V, R_L = 50 Ω, C_L = 7 pF (fixture only)	–	67	–	ns
t_{b-b}	Bit−to−Bit Skew	Within the same differential channel	–	5	–	ps
t_{ch-ch}	Channel−to−Channel Skew	Maximum skew between all channels	–	15	–	ps

Product parametric performance is indicated in the Electrical Characteristics for the listed test conditions, unless otherwise noted. Product performance may not be indicated by the Electrical Characteristics if operated under different conditions.

6. Specification guarantee by design
7. No other delays than the RC network formed by the load resistance and the load capacitance of the switch are added on the bus. For a 10 pF load, this delay is 5 ns which is much smaller than rise and fall time of typical driving systems. Propagation delays on the bus are determined by the driving circuit on the driving side and its interactions with the load of the driven side.

TABLE OF GRAPHS

Symbol	Parameter		Figure
$1080p_{EYE}$	MHL Video Eye Diagram at 3 Gbps (1080p)		4
$720p_{EYE}$ $1080i_{EYE}$	MHL Video Eye Diagram at 2.25 Gbps (720p, 1080i)		5
$USB2.0_{EYE}$	USB 2.0 High Speed 480 Mbps Eye Diagram		6, 7
$USB1.1_{EYE}$	USB 1.1 Full Speed 12 Mbps Eye Diagram		8, 9
$USB1.0_{EYE}$	USB 1.0 Low Speed 1.5 Mbps Eye Diagram		10, 11
I_{CC}	Product Supply Current	vs. V_{CC}	12
R_{ON}	Data Path On Resistance	vs. V_{IS}	13
D_{IL}	Data Switch Differential Insertion Loss	vs. Frequency	14
D_{ISO}	Data Switch Differential Off Isolation	vs. Frequency	15
D_{CTK}	Data Switch Differential Crosstalk	vs. Frequency	16
R_{ON}	Audio Path On Resistance	vs. V_{IS}	17
THD_{AUD}	Audio THD	vs. Frequency	18

TYPICAL OPERATING CHARACTERISTICS

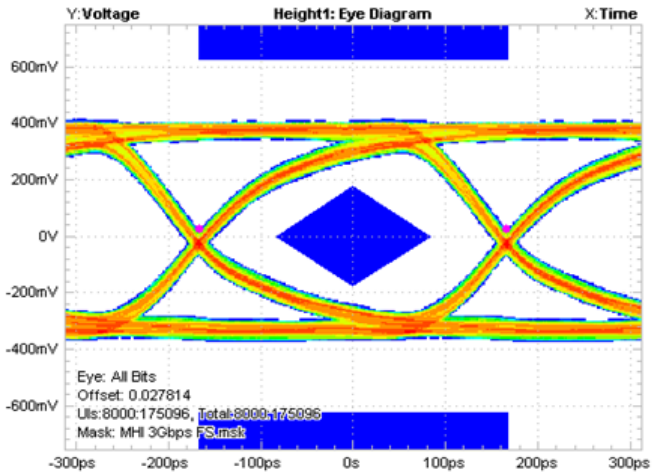

Figure 4. MHL Video Eye Diagram at 3 Gbps (1080p)

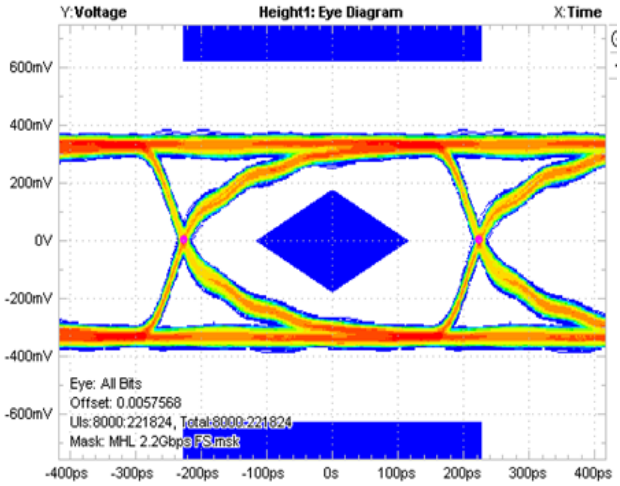

Figure 5. MHL Video Eye Diagram at 2.25 Gbps (720p, 1080i)

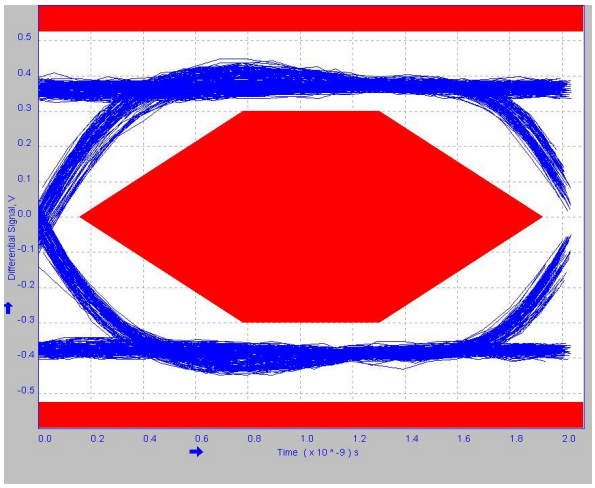

Figure 6. USB 2.0 High Speed Eye Diagram

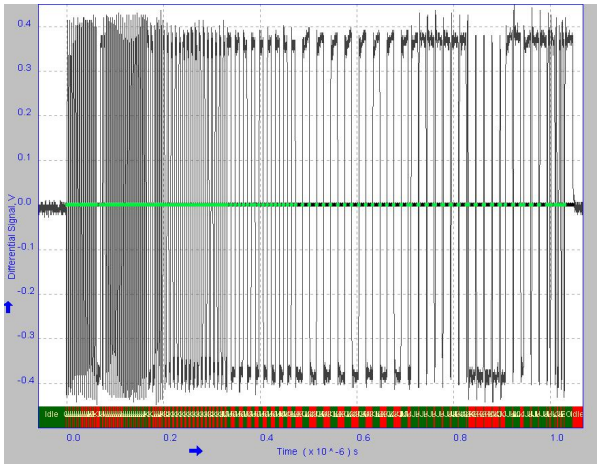

Figure 7. USB 2.0 High Speed Pattern

TYPICAL OPERATING CHARACTERISTICS

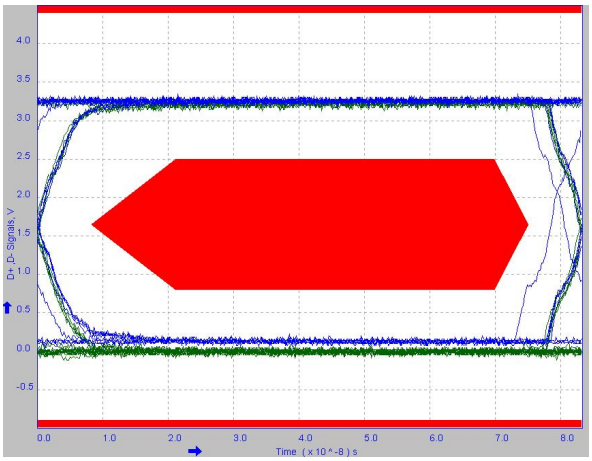

Figure 8. USB 1.1 Full Speed Eye Diagram

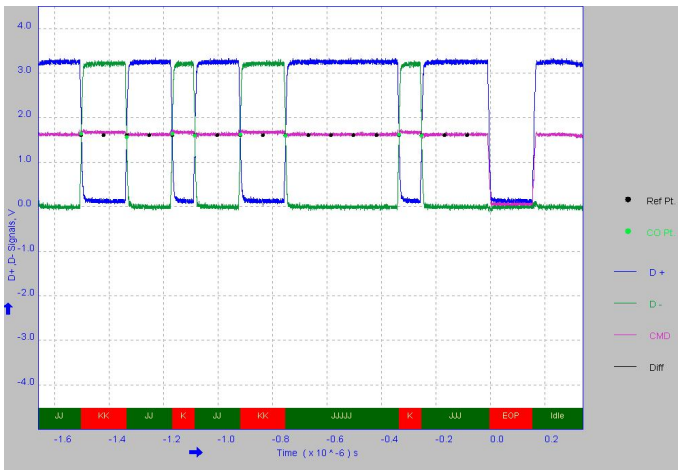

Figure 9. USB 1.0 Full Speed Pattern

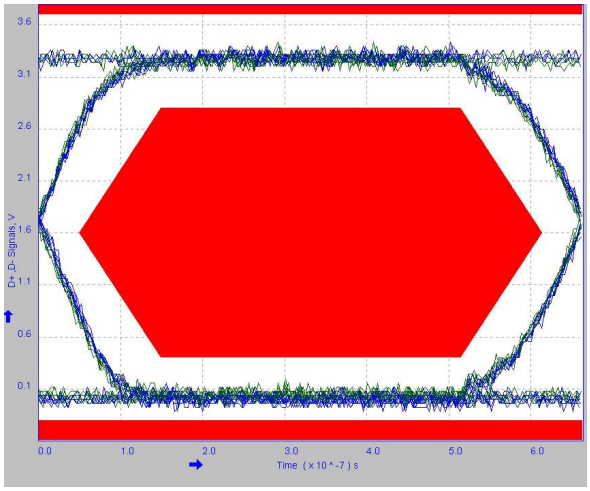

Figure 10. USB 1.0 Low Speed Eye Diagram

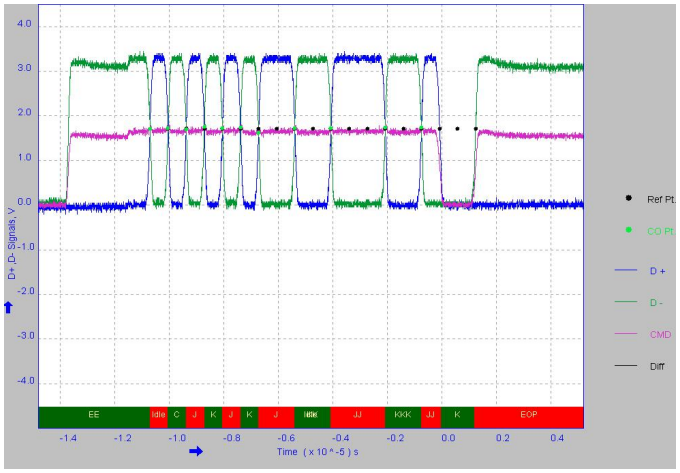

Figure 11. USB 1.0 Low Speed Pattern

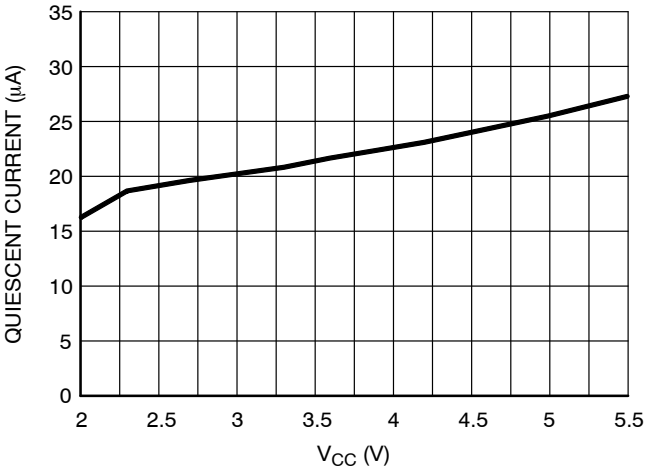

Figure 12. Product Supply Current

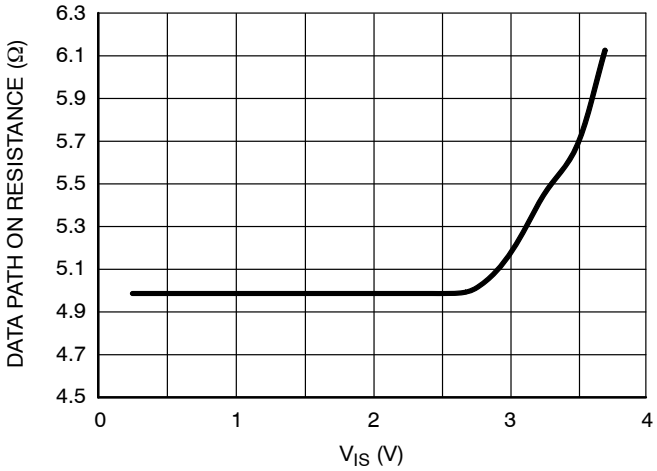

Figure 13. Data Path On Resistance

TYPICAL OPERATING CHARACTERISTICS

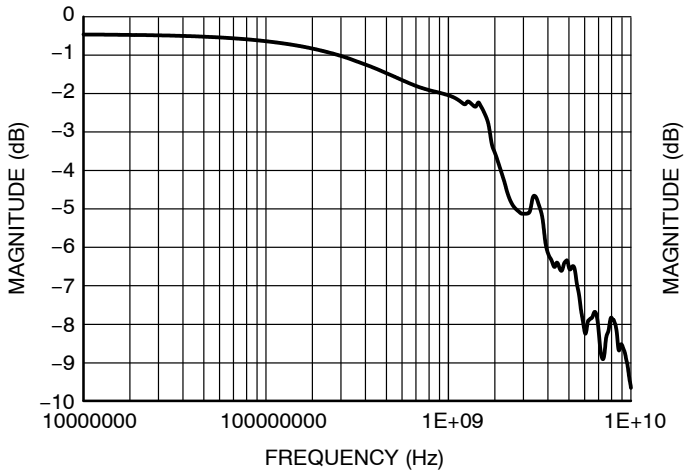

Figure 14. Data Switch Differential Insertion Loss

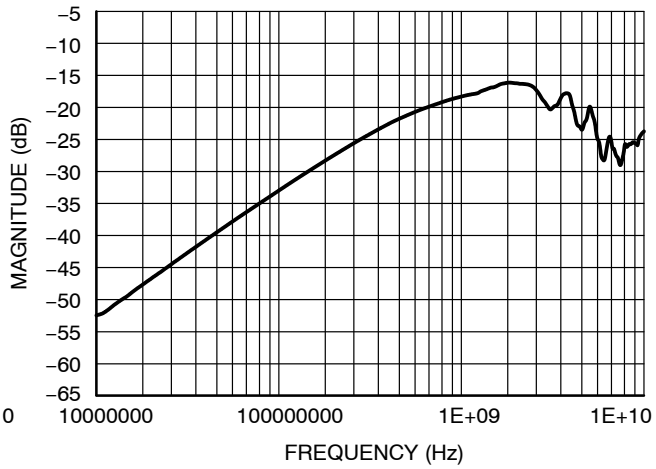

Figure 15. Data Switch Differential Off Isolation

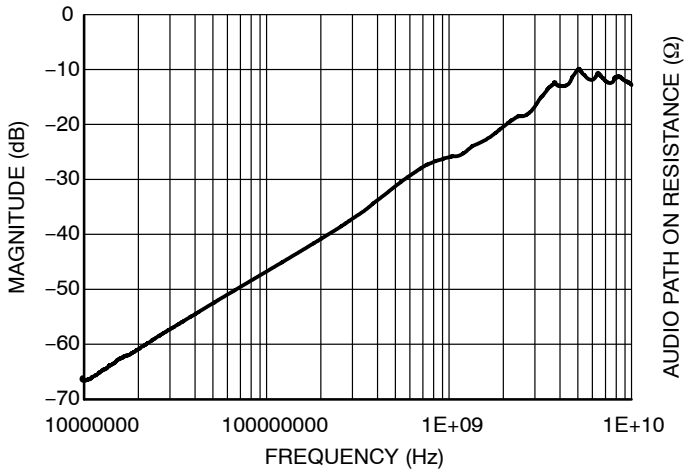

Figure 16. Data Switch Differential Crosstalk

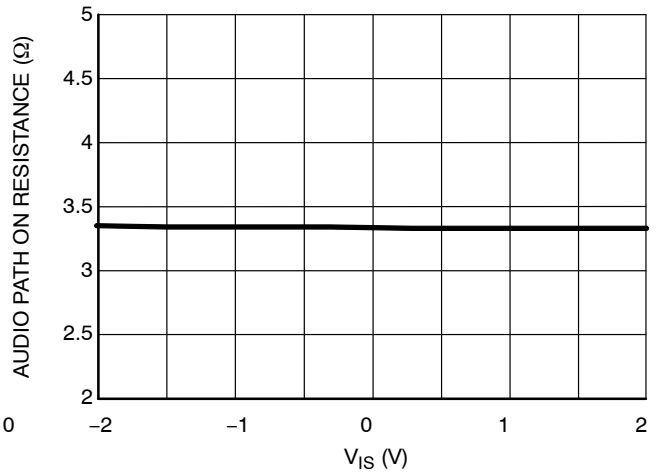

Figure 17. Audio Path On Resistance

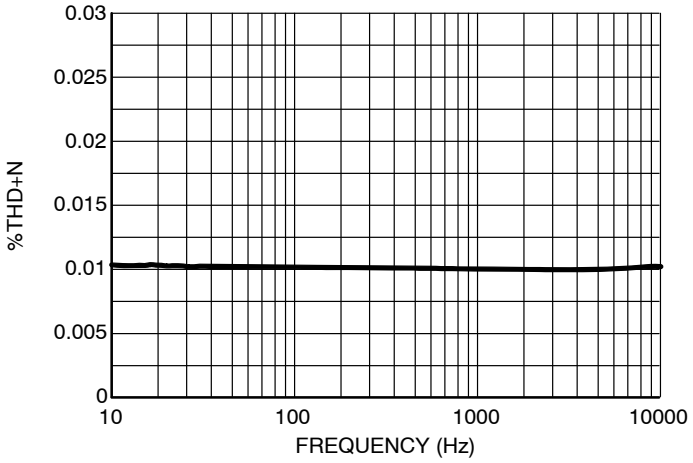

Figure 18. Audio THD

PARAMETER MEASUREMENT INFORMATION

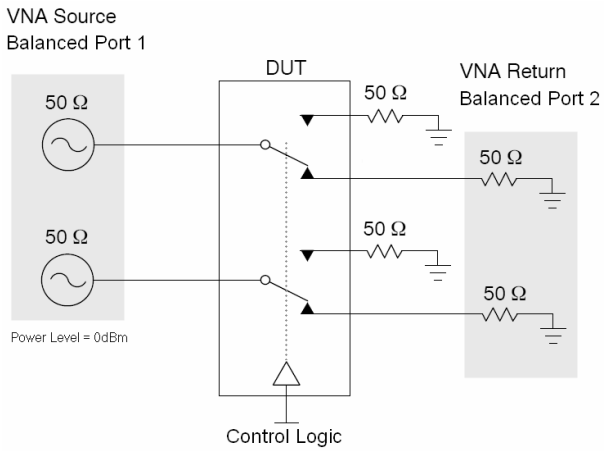

Figure 19. Differential Insertion Loss (S_{DD21})

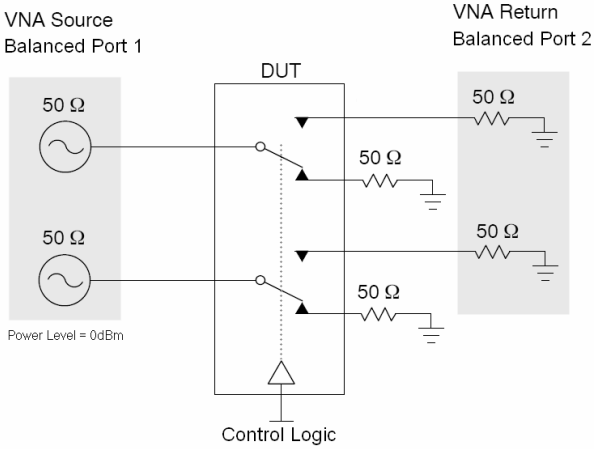

Figure 20. Differential Off Isolation (S_{DD21})

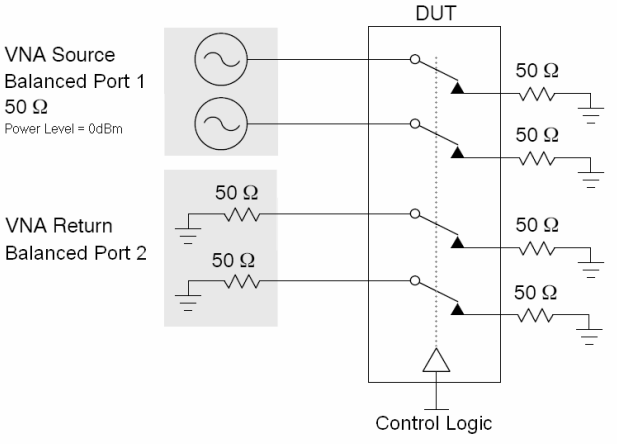

Figure 21. Differential Crosstalk (S_{DD21})

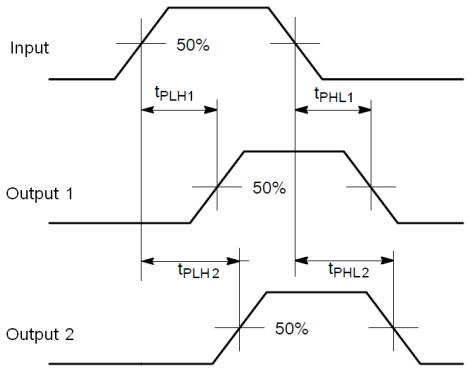

$t_{skew} = |t_{PLH1}-t_{PLH2}|$ or $|t_{PHL1}-t_{PHL2}|$

Figure 22. Bit−to−Bit and Channel−to−Channel Skew

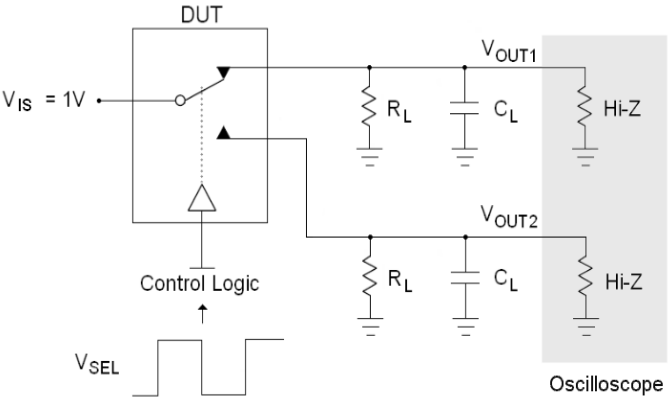

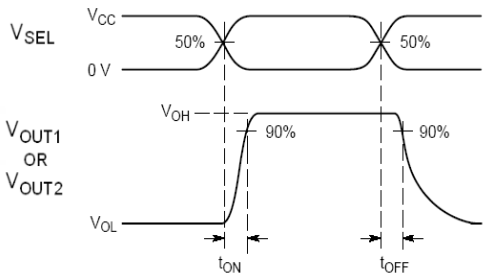

Figure 23. t_{ON} and t_{OFF}

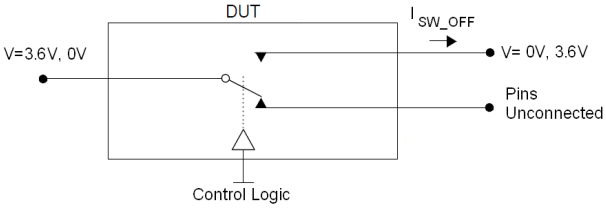

Figure 24. Off State Leakage

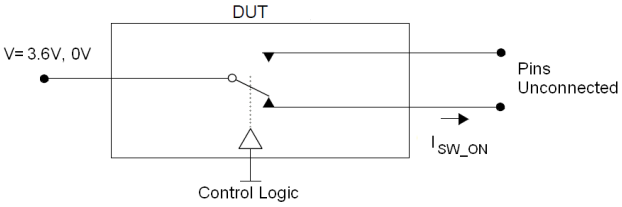

Figure 25. On State Leakage

DETAILED APPLICATION

The NCN1188 voltage range and high bandwidth performance permits switching between audio, video and data signals on a portable device. It allows D+ and D− data pins of a single USB connector to be used for many different functions as pictured by Figure 1:

- USB 2.0 data transfer with backward compatibility to USB 1.1 and USB 1.0
- MHL high definition video transfer up to 3 Gbps for 1080p resolutions
- Audio headset with negative voltage capability to connect true ground audio amplifier
- UART to address programming and testing in factory
- Any other analog or digital data sources within the recommended operating conditions

Figures 26 and 27 detail two design examples with different switching combinations using NCN1188.

In the first example shown in Figure 26, the device is directly supplied from a single Li−Ion battery, typically from 3.0 V to 4.2 V. The NCN1188 switch connects a 5−pin micro−USB connector to a Communication Processor, an MHL Application Processor, and the Audio Management IC headphone amplifier. Each function is active pending on power management IC accessory detection to control IN1 and IN2. This decision is usually made on the D−, D+, and ID pins to detect and differentiate accessory types such as USB cable, USB to HDMI MHL cable and micro−USB stereo headset.

For solutions related to portable devices accessory detection, contact your **onsemi** Field Applications Engineer.

The USB 3.0 Micro−B receptacle may be considered a combination of the USB 2.0 Micro−B interface and USB 3.0 SuperSpeed contacts and maintains backward compatibility with USB 2.0 Micro−B plugs. As a consequence, the NCN1188's USB 2.0 capability is fully compatible to the USB 3.0 Micro−B receptacle, as well as USB 2.0 accessories.

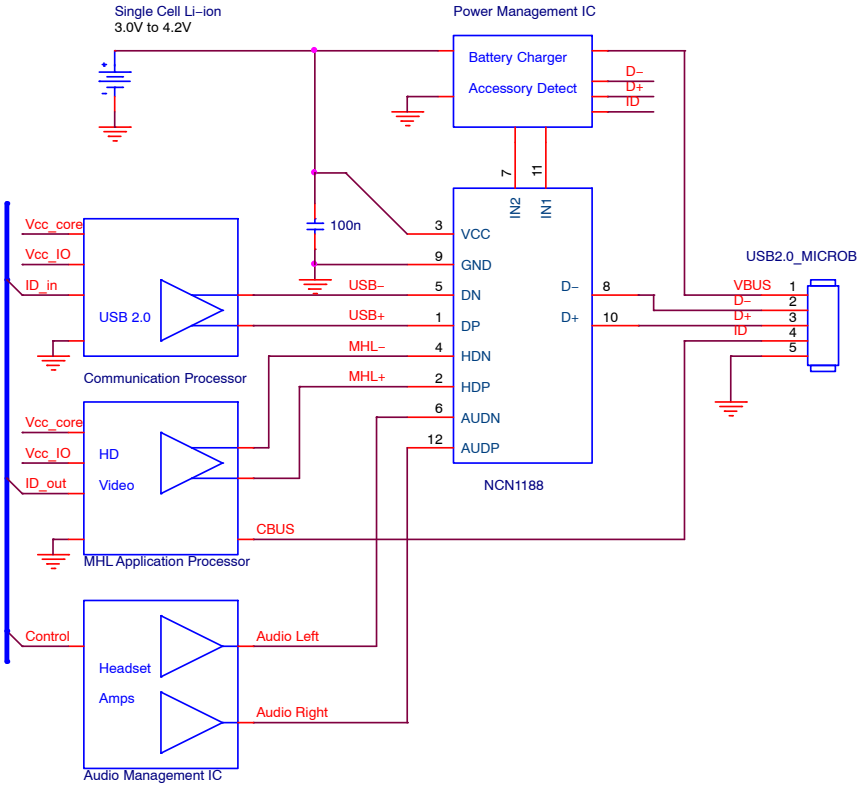

Figure 26. Schematic Example for USB 2.0, MHL, and Audio Combination; NCN1188 being supplied from battery

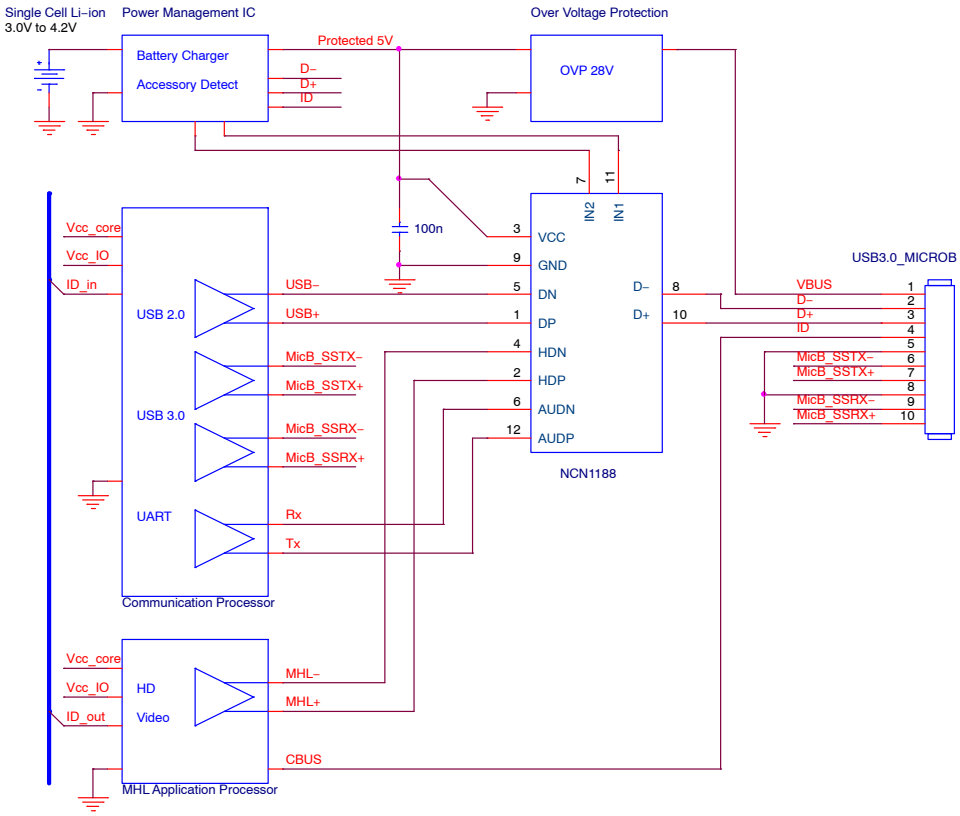

Figure 27. Schematic Example for USB 2.0, MHL, and UART Combination; NCN1188 Being Supplied by Protected VBUS 5 V

In this second design proposal, as NCN1188 must be active only when VBUS accessories are connected (USB cable, UART cable and MHL cable), the device is supplied from a protected VBUS 5 V. This design arrangement limits the system's overall quiescent current and saves battery life. Figure 27 also pictures NCN1188 around a USB 3.0 Micro−B topology: USB 2.0, UART and MHL Video pairs remain multiplexed with D− and D+ while the two USB 3.0 differential pairs are directly connected to the main communication processor.

Pull−down resistors of 1 MΩ down to 100 kΩ can optionally be added on the D− and D+ I/Os for preventing eventual floating voltage situation on the NCN1188. This is not systematically necessary and has to be considered in regards to the application.

The flexibility of the NCN1188 offers many extra application and design combinations.

PCB DESIGN PROCEDURE

Implementing a high speed device requires careful design of signal traces to preserve signal integrity. The following electrical layout guidelines are basic rules to follow when designing boards capable of high speed transmission.

- The bypass capacitor must be placed as close as possible to the V_{CC} input pin for noise immunity.
- The PCB should be designed to comply with the characteristic impedance requirements of MHL and USB.
- Make the signal traces as short as possible to reduce losses through the PCB. Furthermore, all corresponding D+ / D− line segment pairs should be the same length.
- The use of turns or bends to route these signals should be avoided when possible. Use 45° bends instead of 90° bends where bends are needed. The use of vias to route these signals should be avoided when possible.

UQFN12 1.7x2.0, 0.4P
CASE 523AE
ISSUE A

DATE 11 JUN 2007

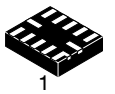

1
SCALE 4:1

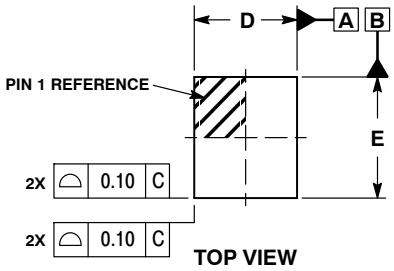

TOP VIEW

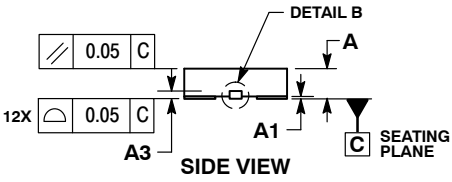

SIDE VIEW

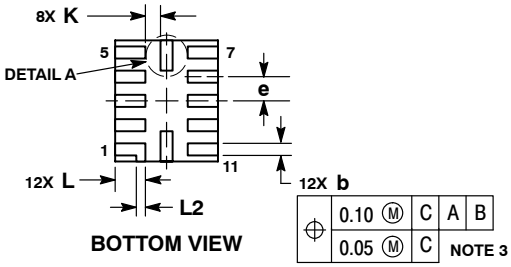

BOTTOM VIEW

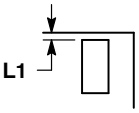

DETAIL A
NOTE 5

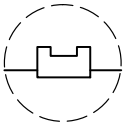

DETAIL B
OPTIONAL CONSTRUCTION

NOTES:
1. DIMENSIONING AND TOLERANCING PER ASME Y14.5M, 1994.
2. CONTROLLING DIMENSION: MILLIMETERS
3. DIMENSION b APPLIES TO PLATED TERMINAL AND IS MEASURED BETWEEN 0.15 AND 0.30 MM FROM TERMINAL TIP.
4. MOLD FLASH ALLOWED ON TERMINALS ALONG EDGE OF PACKAGE. FLASH 0.03 MAX ON BOTTOM SURFACE OF TERMINALS.
5. DETAIL A SHOWS OPTIONAL CONSTRUCTION FOR TERMINALS.

	MILLIMETERS	
DIM	MIN	MAX
A	0.45	0.55
A1	0.00	0.05
A3	0.127 REF	
b	0.15	0.25
D	1.70 BSC	
E	2.00 BSC	
e	0.40 BSC	
K	0.20	----
L	0.45	0.55
L1	0.00	0.03
L2	0.15 REF	

GENERIC MARKING DIAGRAM*

XX = Specific Device Code
M = Date Code
▪ = Pb−Free Package

*This information is generic. Please refer to device data sheet for actual part marking. Pb−Free indicator, “G” or microdot “ ▪”, may or may not be present.

MOUNTING FOOTPRINT SOLDERMASK DEFINED

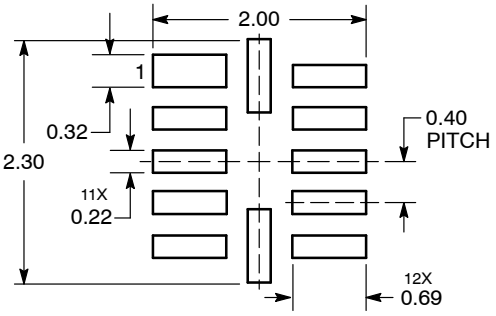

DIMENSIONS: MILLIMETERS

DOCUMENT NUMBER:	98AON23418D	Electronic versions are uncontrolled except when accessed directly from the Document Repository. Printed versions are uncontrolled except when stamped “CONTROLLED COPY” in red.
DESCRIPTION:	UQFN12 1.7 X 2.0, 0.4P	PAGE 1 OF 1

onsemi and onsemi are trademarks of Semiconductor Components Industries, LLC dba **onsemi** or its subsidiaries in the United States and/or other countries. **onsemi** reserves the right to make changes without further notice to any products herein. **onsemi** makes no warranty, representation or guarantee regarding the suitability of its products for any particular purpose, nor does **onsemi** assume any liability arising out of the application or use of any product or circuit, and specifically disclaims any and all liability, including without limitation special, consequential or incidental damages. **onsemi** does not convey any license under its patent rights nor the rights of others.

onsemi, onsemi, and other names, marks, and brands are registered and/or common law trademarks of Semiconductor Components Industries, LLC dba "**onsemi**" or its affiliates and/or subsidiaries in the United States and/or other countries. **onsemi** owns the rights to a number of patents, trademarks, copyrights, trade secrets, and other intellectual property. A listing of **onsemi**'s product/patent coverage may be accessed at www.onsemi.com/site/pdf/Patent−Marking.pdf. **onsemi** reserves the right to make changes at any time to any products or information herein, without notice. The information herein is provided "as−is" and **onsemi** makes no warranty, representation or guarantee regarding the accuracy of the information, product features, availability, functionality, or suitability of its products for any particular purpose, nor does **onsemi** assume any liability arising out of the application or use of any product or circuit, and specifically disclaims any and all liability, including without limitation special, consequential or incidental damages. Buyer is responsible for its products and applications using **onsemi** products, including compliance with all laws, regulations and safety requirements or standards, regardless of any support or applications information provided by **onsemi**. "Typical" parameters which may be provided in **onsemi** data sheets and/or specifications can and do vary in different applications and actual performance may vary over time. All operating parameters, including "Typicals" must be validated for each customer application by customer's technical experts. **onsemi** does not convey any license under any of its intellectual property rights nor the rights of others. **onsemi** products are not designed, intended, or authorized for use as a critical component in life support systems or any FDA Class 3 medical devices or medical devices with a same or similar classification in a foreign jurisdiction or any devices intended for implantation in the human body. Should Buyer purchase or use **onsemi** products for any such unintended or unauthorized application, Buyer shall indemnify and hold **onsemi** and its officers, employees, subsidiaries, affiliates, and distributors harmless against all claims, costs, damages, and expenses, and reasonable attorney fees arising out of, directly or indirectly, any claim of personal injury or death associated with such unintended or unauthorized use, even if such claim alleges that **onsemi** was negligent regarding the design or manufacture of the part. **onsemi** is an Equal Opportunity/Affirmative Action Employer. This literature is subject to all applicable copyright laws and is not for resale in any manner.

ADDITIONAL INFORMATION

TECHNICAL PUBLICATIONS:
Technical Library: www.onsemi.com/design/resources/technical−documentation
onsemi Website: www.onsemi.com

ONLINE SUPPORT: www.onsemi.com/support
For additional information, please contact your local Sales Representative at
www.onsemi.com/support/sales