HA Varistor Series

Industrial High Energy Terminal Varistors

Additional Information

Resources | Accessories | Samples

Agency Approvals

Agency	Agency Approval	Agency File Number
c UL us	UL1449	E320116

Description

HA Series transient surge suppressors are industrial high energy Metal-Oxide Varistors (MOVs). They are designed to provide secondary surge protection in the outdoor and service entrance environment (distribution panels) of buildings, and also in industrial applications for motor controls and power supplies used in the oil-drilling, mining, and transportation fields.

The design of the HA Series of MOVs provide rigid terminals for screw mounting. Also available in a clipped lead version for through hole board placement or to accommodate soldered leads designation "HC."

See Ratings and Specifications Table for part number and brand information.

Features & Benefits

- Lead–free, Halogen-Free and RoHS compliant.
- Wide operating voltage range
- VM(AC)RMS 110V to 750V
- Two disc sizes available 32mm and 40mm
- High energy absorption capability WTM = 170J to 1050J
- High peak pulse current capability, ITM = 25,000A to 40,000A
- Rigid terminals for secure mounting
- Available in trimmed version for through hole board mounting – Designation "HC"
- No derating up to 85°C ambient

Absolute Maximum Ratings

Continuous		HA Series	Units
Steady State Applied Voltage:			
	AC Voltage Range ($V_{M(AC)RMS}$)	110 to 750	V
	DC Voltage Range ($V_{M(DC)}$)	148 to 970	V
Transients:			
	Peak Pulse Current (I_{TM})		
	For 8/20µs Current Wave (See Figure 2)	25,000 to 40,000	A
	Single Pulse Energy Range		
	For 2ms Current Squarewave (W_{TM})	160 to 1050	J
Operating Ambient Temperature Range (T_A)		-55 to +85	°C
Storage Temperature Range (T_{STG})		-55 to +125	°C
Temperature Coefficient (a^V) of Clamping Voltage (V_C) at Specified Test Current		<0.01	%/°C
Hi–Pot Encapsulation (COATING Isolation Voltage Capability) (Dielectric must withstand indicated DC voltage for one minute per MIL–STD 202, Method 301)		2500	V
COATING Insulation Resistance		1000	MΩ

Note: For ratings of individual members of a series, see Device Ratings and Specifications chart

Caution: Stresses above those listed in "Absolute Maximum Ratings" may cause permanent damage to the device. This is a stress only rating and operation of the device at these or any other conditions above those indicated in the operational sections of this specification is not implied.

© 2023 Littelfuse, Inc.
Specifications are subject to change without notice.
Revised: GD. 02/06/23

HA Varistor Series

Industrial High Energy Terminal Varistors

HA Series Ratings & Specifications

Part Number Device Branding	Maximum Rating (85°C)				Specifications (25°C)				
	Continuous		Transient		Varistor Voltage at 1mA DC Test Current			Maximum Clamping Volt V_C at 200A Current (8/20µs)	Typical Capacitance f = 1MHz
	V_{RMS}	V_{DC}	Energy (2ms)	Peak Current 8 x 20µs					
	$V_{M(AC)}$	$V_{M(DC)}$	W_{TM}	I_{TM}	Min	$V_{N(DC)}$	Max	V_C	C
	(V)	(V)	Energy	(A)	(V)	(V)	(V)	(A)	(pF)
V111HA32	110	148	160	25000	156	173	190	293	5450
V111HA40	110	148	220	40000[1]	156	173	190	288	11600
V131HA32	130	175	200	25000	184.5	205	225.5	350	4700
V131HA40	130	175	270	40000[2]	184.5	205	225.5	345	10000
V141HA32	140	188	210	25000	198	220	242	380	4230
V141HA40	140	188	290	40000[3]	198	220	242	375	9000
V151HA32	150	200	220	25000	216	240	264	410	4000
V151HA40	150	200	300	40000[4]	216	240	264	405	8000
V181HA32	180	240	240	25000	254	282	310	475	3200
V181HA40	180	240	330	40000	254	282	310	468	6800
V201HA32	200	265	260	25000	283	314	345	540	3180
V201HA40	200	265	350	40000	283	314	345	533	6350
V251HA32	250	330	330	25000	351	390	429	650	2500
V251HA40	250	330	370	40000	351	390	429	630	5000
V271HA32	275	369	360	25000	387	430	473	710	2200
V271HA40	275	369	400	40000	387	430	473	690	4500
V301HA32	300	410	370	25000	423	470	517	795	2050
V301HA40	300	410	430	40000	423	470	517	780	4100
V321HA32	320	420	390	25000	459	510	561	845	1900
V321HA40	320	420	460	40000	459	510	561	825	3800
V331HA32	330	435	385	25000	467	518.5	570	860	1870
V331HA40	330	435	475	40000	467	518.5	570	843	3750
V351HA32	350	460	390	25000	495	549.5	604	910	1800
V351HA40	350	460	500	40000	495	549.5	604	894	3600
V391HA32	385	510	395	25000	545	604	663	1020	1750
V391HA40	385	510	550	40000	545	604	663	1000	3500
V421HA32	420	560	400	25000	612	680	748	1120	1500
V421HA40	420	560	600	40000	612	680	748	1100	3000
V441HA32	440	585	420	25000	622	690	758	1200	1450
V441HA40	440	585	630	40000	622	690	758	1147	2900
V481HA32	480	640	450	25000	675	750	825	1290	1300
V481HA40	480	640	650	40000	675	750	825	1230	2700
V511HA32	510	675	500	25000	738	820	902	1355	1200
V511HA40	510	675	700	40000	738	820	902	1295	2500
V551HA32	550	710	530	25000	778	863.5	949	1515	1190
V551HA40	550	710	755	40000	778	863.5	949	1430	2390
V571HA32	575	730	550	25000	819	910	1001	1570	1100
V571HA40	575	730	770	40000	819	910	1001	1480	2200
V661HA32	660	850	600	25000	945	1050	1155	1820	1000
V661HA40	660	850	900	40000	945	1050	1155	1720	2000
V681HA32	680	875	610	25000	962	1067.5	1173	1830	850
V681HA40	680	875	925	40000	962	1067.5	1173	1780	1900
V751HA32	750	970	700	25000	1080	1200	1320	2050	800
V751HA40	750	970	1050	40000	1080	1200	1320	2000	1800

Note: Average power dissipation of transients not to exceed 2.0W per varistor

1. 40kA capability depends on applications rated up to 97Vrms. 30kA applies if > 97 Vrms.
2. 40kA capability depends on applications rated up to 115Vrms. 30kA applies if > 115 Vrms.
3. 40kA capability depends on applications rated up to 123Vrms. 30kA applies if > 123 Vrms.
4. 40kA capability depends on applications rated up to 132Vrms. 30kA applies if > 132Vrms.

© 2023 Littelfuse, Inc.
Specifications are subject to change without notice.

Revised: GD. 02/06/23

HA Varistor Series

Industrial High Energy Terminal Varistors

Power Dissipation Ratings

Current , Energy and Power De–Rating Curve

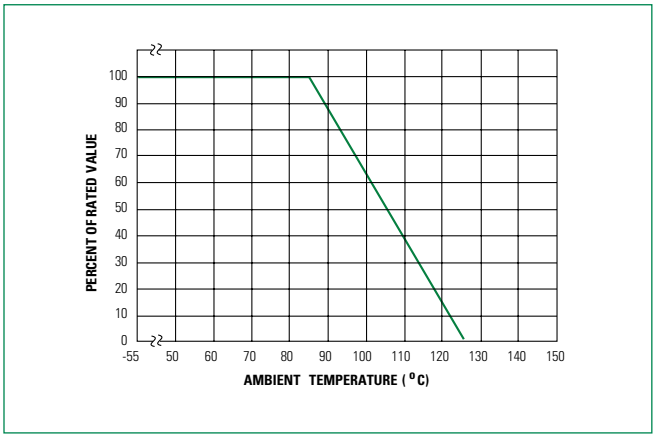

Should transients occur in rapid succession, the average power dissipation required is simply the energy (watt-seconds) per pulse times the number of pulses per second. The power so developed must be within the specifications shown on the Device Ratings and Specifications table for the specific device. Furthermore, the operating values need to be derated at high temperatures as shown in above. Because varistors can only dissipate a relatively small amount of average power they are, therefore, not suitable for repetitive applications that involve substantial amounts for average power dissipation.

Peak Pulse Current Test Waveform

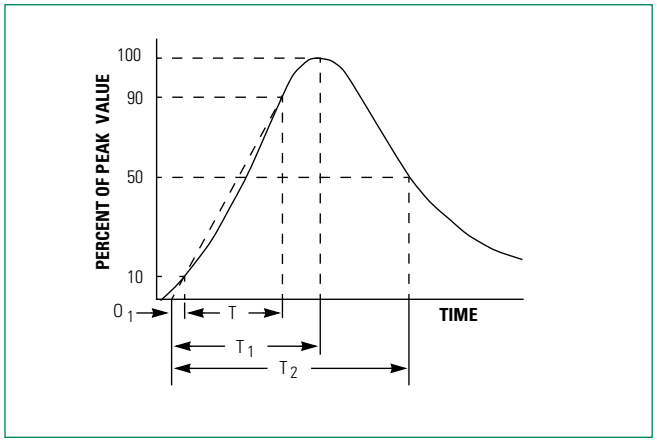

0_1 = Virtual Origin of Wave
T = Time from 10% to 90% of Peak
T_1 = Rise Time = 1.25 x T
T_2 = Decay Time

Example - For an 8/20 μs Current Waveform:
8μs = T_1 = Rise Time
20μs = T_2 = Decay Time

Maximum Clamping Voltage for 32mm Parts

V111HA32–V751HA32

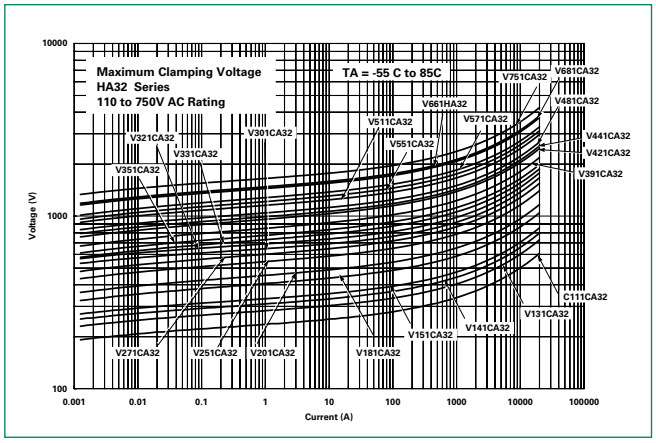

Maximum Clamping Voltage for 40mm Parts

V111HA40–V751HA40

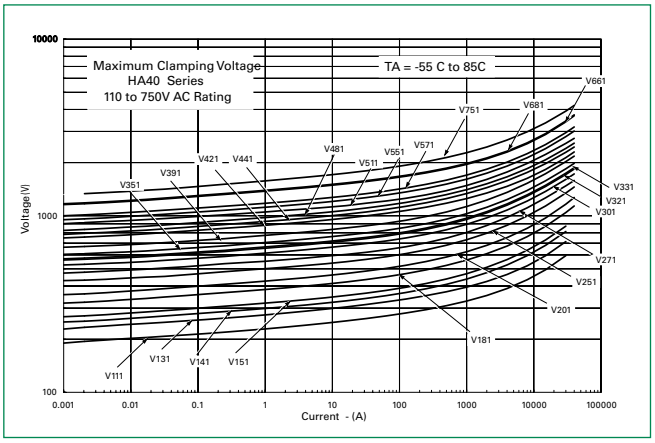

© 2023 Littelfuse, Inc.
Specifications are subject to change without notice.
Revised: GD. 02/06/23

HA Varistor Series

Industrial High Energy Terminal Varistors

Repetitive Surge Capability for 32mm Parts

V111HA32 – V751HA32

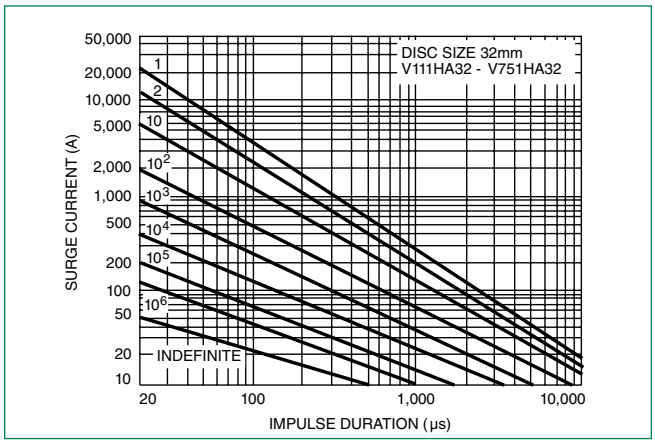

Repetitive Surge Capability for 40mm Parts

V111HA40 – V751HA40

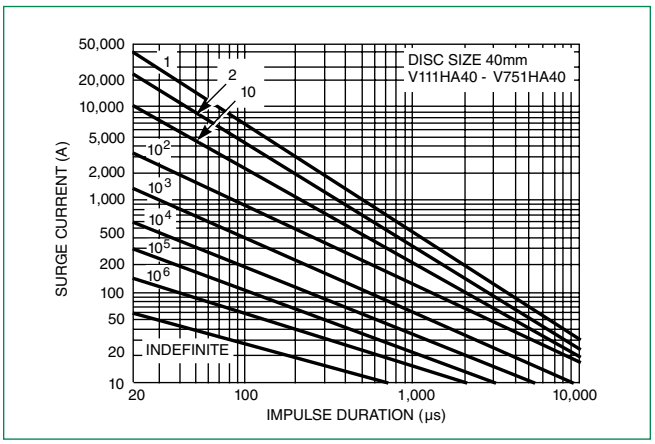

Wave Solder Profile

Non Lead–free Profile

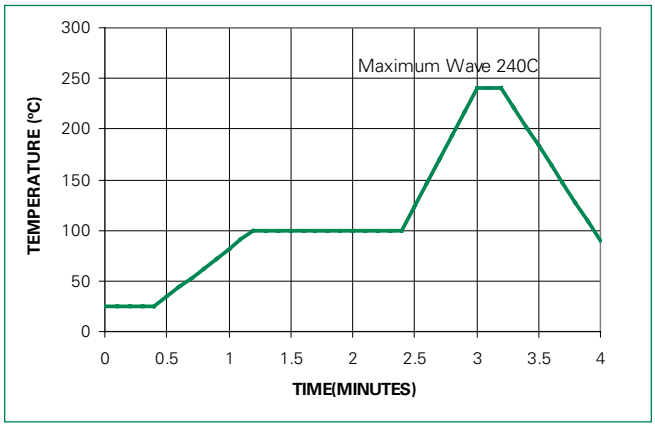

Lead–free Profile

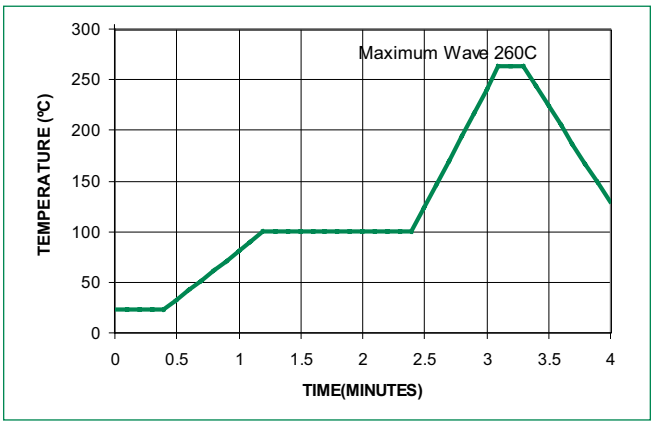

Physical Specifications

Lead Material	Tin–plated Copper
Soldering Characteristics	Solderability per MIL–STD–202, Method 208
Insulating Material	Cured, flame retardant epoxy polymer meets UL94V–0 requirements.
Device Labeling	LF, Part Number and date code

Environmental Specifications

Operating Temperature	-55°C to +85°C/
Storage Temperature	-55°C to +125°C
Humidity Aging	+85°C, 85% RH, 1000 hours +/- 10% typical resistance change
Thermal Shock	+85°C to -40°C 5 times +/- 10% typical resistance change
Solvent Resistance	MIL–STD–202, Method 215
Moisture Sensitivity	Level 1, J-STD-020

© 2023 Littelfuse, Inc.
Specifications are subject to change without notice.
Revised: GD. 02/06/23

HA Varistor Series

Industrial High Energy Terminal Varistors

Dimensions

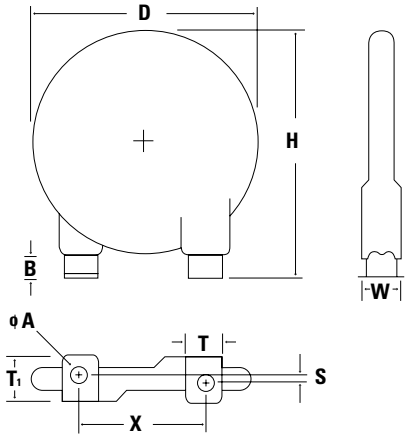

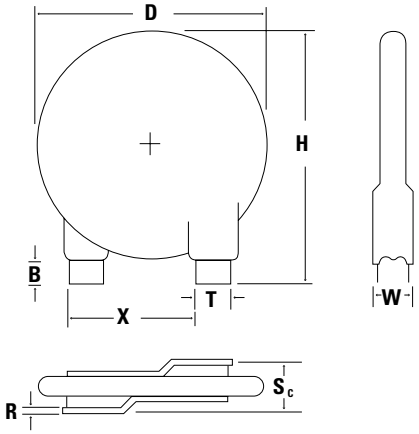

HA Series Outline Specifications

(Dimensions in Millimeters)

	D	H	B	X	T	T1	øA	s
	Max	Max	Min	Nom	Nom	Max	Max	Offset
HA32	35.5	50.00	3.0	25	9.3	10.4	4.2	Depends on Device Voltage (See Table Below)
HA40	42.5	57.00	3.0	25	9.3	10.4	4.2	

HC Series Outline Specifications

(Dimensions in Millimeters)

	D	H	B	X	T	R	s_c
	Max	Max	Min	Nom	Nom	Max	Offset
HC32	35.5	50.00	5.0	25	9.30	1.0	Depends on Device Voltage (See Table Below)
HC40	42.5	57.00	5.0	25	9.30	1.0	

HA Series Maximum Thickness and Terminal Offsets

(Dimensions in Millimeters)

Voltage	Thickness "W"		Dimension "S" (-/+1mm)	
	HA32	HA40	HA32	HA40
V111 - V351	9.00	9.00	3.90	3.90
V391 - V511	11.00	11.00	2.60	2.60
V551 - V751	13.00	13.00	1.00	1.00

HC Series Maximum Thickness and Terminal Offsets

(Dimensions in Millimeters)

Voltage	Thickness "W"		Dimension "S_c" (-/+1mm)	
	HC32	HC40	HC32	HC40
V111 - V351	9.00	9.00	6.00	6.00
V391 - V511	11.00	11.00	7.30	8.10
V551 - V751	13.00	13.00	8.90	10.00

Part Numbering System

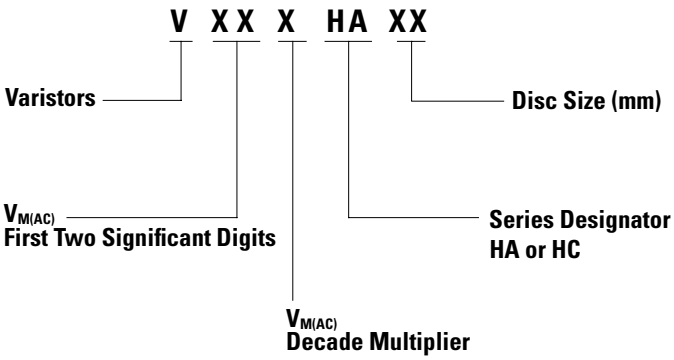

Disclaimer Notice - Information furnished is believed to be accurate and reliable. However, users should independently evaluate the suitability of and test each product selected for their own applications. Littelfuse products are not designed for, and may not be used in, all applications. Read complete Disclaimer Notice at www.littelfuse.com/disclaimer-electronics.

© 2023 Littelfuse, Inc.
Specifications are subject to change without notice.
Revised: GD. 02/06/23